Sequential Logic #2

CSIM601251

Slide By : Erdefi Rakun

Fasilkom UI

Outline

- Memory Elements
- Latches: *S-R* Latch, *D* Latch
- Flip-flops: *S-R* flip-flop, *D* flip-flop, *J-K* flip-flops, *T* flip-flops
- Asynchronous Inputs
- Synchronous Sequential Circuit Analysis

Note: These slides are taken from Aaron Tan's slide

Synchronous Sequential Circuits

- Building blocks: logic gates and flip-flops.
- Flip-flops make up the memory while the gates form one or more combinational subcircuits.
- We have discussed *S-R* flip-flop, *J-K* flip-flop, *D* flip-flop and *T* flip-flop.

Flip-Flop Characteristic Tables

- Each type of flip-flop has its own behaviour, shown by its characteristic table.

J	*K*	*Q(t+1)*	Comments
0	0	*Q(t)*	No change
0	1	0	Reset
1	0	1	Set
1	1	*Q(t)'*	Toggle

S	*R*	*Q(t+1)*	Comments
0	0	*Q(t)*	No change
0	1	0	Reset
1	0	1	Set
1	1	?	Unpredictable

D	*Q(t+1)*	
0	0	Reset
1	1	Set

T	*Q(t+1)*	
0	*Q(t)*	No change
1	*Q(t)'*	Toggle

Sequential Circuits: Analysis (1/7)

- Given a sequential circuit diagram, we can analyze its behaviour by deriving its *state table* and hence its *state diagram*.
- Requires *state equations* to be derived for the flip-flop inputs, as well as *output functions* for the circuit outputs other than the flip-flops (if any).
- We use $A(t)$ and $A(t+1)$ (or simply A and A^+) to represent the present state and next state, respectively, of a flip-flop represented by A.

Sequential Circuits: Analysis (2/7)

- Example using *D* flip-flops

State equations:

$A^+ = A \cdot x + B \cdot x$

$B^+ = A' \cdot x$

Output function:

$y = (A + B) \cdot x'$

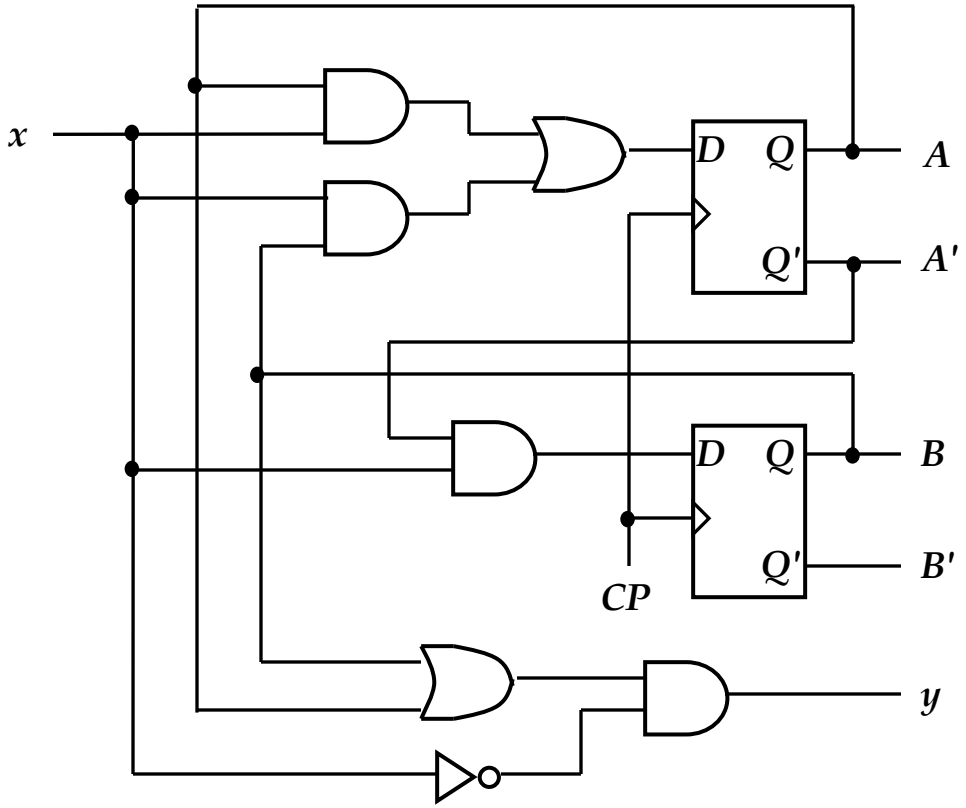

Figure 1

Sequential Circuits: Analysis (3/7)

- From the *state equations* and *output function*, we derive the ***state table***, consisting of all possible binary combinations of present states and inputs.
- State table
  - Similar to truth table.
  - Inputs and present state on the left side.
  - Outputs and next state on the right side.
- m flip-flops and n inputs $\rightarrow 2^{m+n}$ rows.

Sequential Circuits: Analysis (4/7)

- ***State table*** for circuit of Figure 1:

State equations:

$A^+ = A \cdot x + B \cdot x$

$B^+ = A' \cdot x$

Output function:

$y = (A + B) \cdot x'$

Present State		Input	Next State		Output
A	B	x	A^+	B^+	y
0	0	0	0	0	0
0	0	1	0	1	0
0	1	0	0	0	1
0	1	1	1	1	0
1	0	0	0	0	1
1	0	1	1	0	0
1	1	0	0	0	1
1	1	1	1	0	0

Sequential Circuits: Analysis (5/7)

- Alternative form of state table:

Full table

Present State		Input	Next State		Output
A	B	x	A^+	B^+	y
0	0	0	0	0	0
0	0	1	0	1	0
0	1	0	0	0	1
0	1	1	1	1	0
1	0	0	0	0	1
1	0	1	1	0	0
1	1	0	0	0	1
1	1	1	1	0	0

Compact table

Present State	Next State		Output	
	x=0	x=1	x=0	x=1
AB	A^+B^+	A^+B^+	y	y
00	00	01	0	0
01	00	11	1	0
10	00	10	1	0
11	00	10	1	0

Sequential Circuits: Analysis (6/7)

- From the *state table*, we can draw the ***state diagram***.
- State diagram
  - Each state is denoted by a circle.
  - Each arrow (between two circles) denotes a transition of the sequential circuit (a row in state table).
  - A label of the form a/b is attached to each arrow where a (if there is one) denotes the inputs while b (if there is one) denotes the outputs of the circuit in that transition.
- Each combination of the flip-flop values represents a state. Hence, m flip-flops $\rightarrow$ up to 2^m states.

Sequential Circuits: Analysis (7/7)

- **State diagram** of the circuit of Figure 1:

Present State	Next State		Output	
	x=0	x=1	x=0	x=1
AB	A^+B^+	A^+B^+	y	y
00	00	01	0	0
01	00	11	1	0
10	00	10	1	0
11	00	10	1	0

DONE!

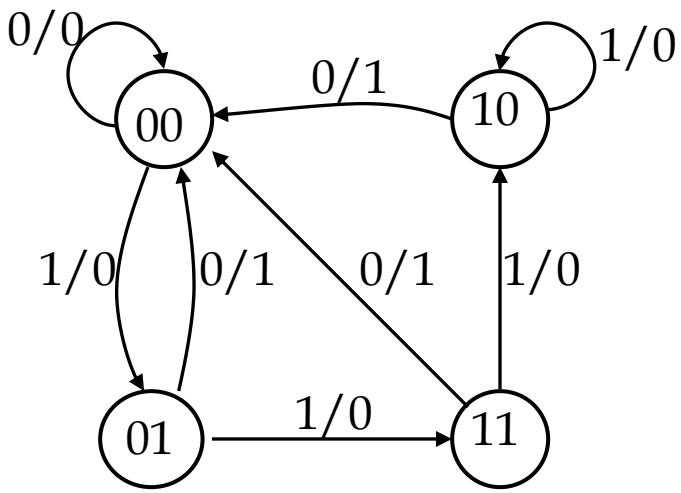

Flip-Flop Input Function (1/3)

- The outputs of a sequential circuit are functions of the present states of the flip-flops and the inputs. These are described algebraically by the *circuit output functions*.
  - In Figure 1: $y = (A + B)\cdot x'$
- The part of the circuit that generates inputs to the flip-flops are described algebraically by the *flip-flop input functions* (or *flip-flop input equations*).
- The flip-flop input functions determine the next state generation.
- From the flip-flop input functions and the characteristic tables of the flip-flops, we obtain the next states of the flip-flops.

Flip-Flop Input Function (2/3)

- Example: circuit with a *JK* flip-flop.
- We use 2 letters to denote each flip-flop input: the first letter denotes the input of the flip-flop (*J* or *K* for *J-K* flip-flop, *S* or *R* for *S-R* flip-flop, *D* for *D* flip-flop, *T* for *T* flip-flop) and the second letter denotes the name of the flip-flop.

$$JA = B \cdot C' \cdot x + B' \cdot C \cdot x'$$
$$KA = B + y$$

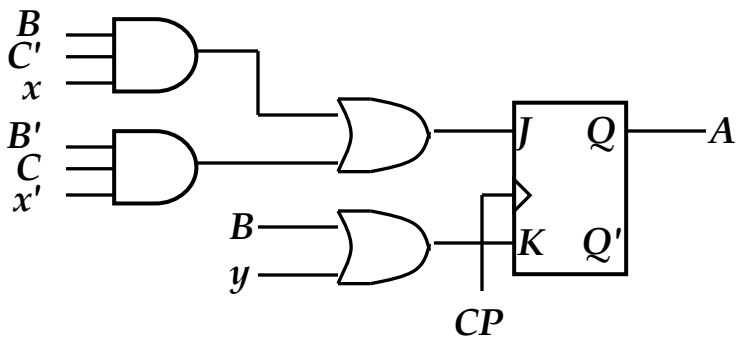

Flip-Flop Input Function (3/3)

- In Figure 1, we obtain the following state equations by observing that $Q^+ = DQ$ for a D flip-flop:

$$A^+ = A \cdot x + B \cdot x \qquad \text{(since } DA = A \cdot x + B \cdot x\text{)}$$

$$B^+ = A' \cdot x \qquad \text{(since } DB = A' \cdot x\text{)}$$

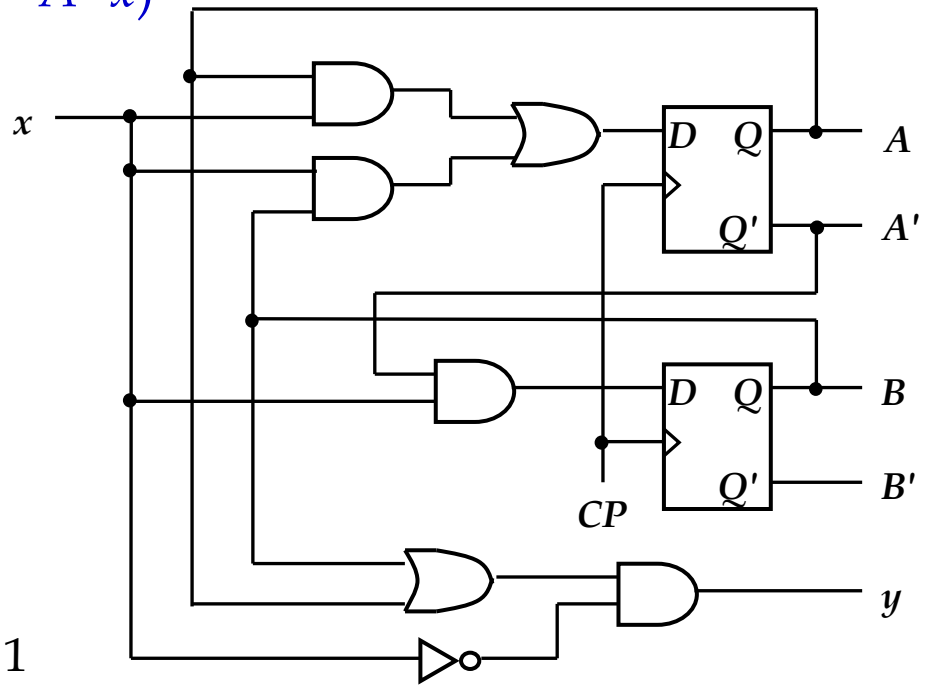

Figure 1

Analysis: Example #2 (1/3)

- Given Figure 2, a sequential circuit with two *J-K* flip-flops *A* and *B*, and one input *x*.

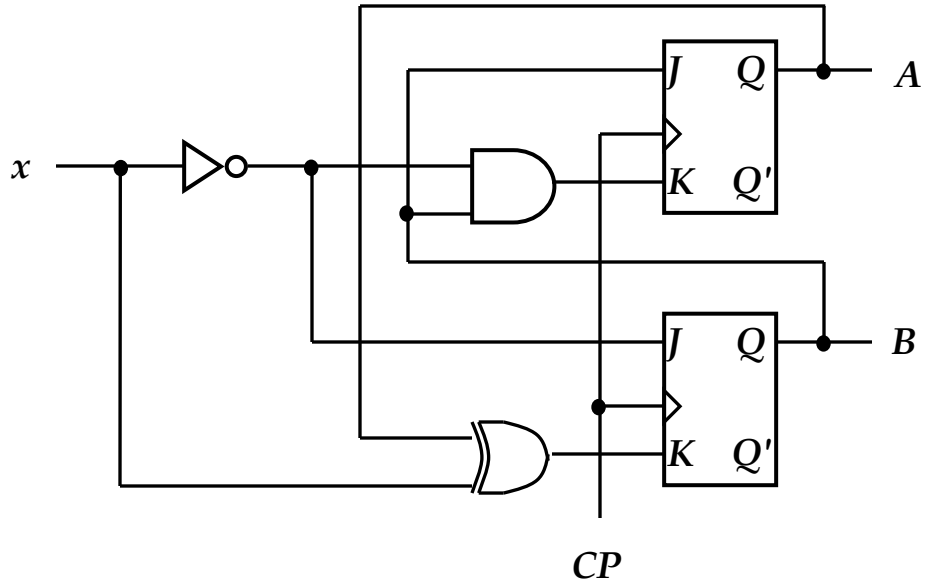

Figure 2

- Obtain the flip-flop input functions from the circuit:

$JA = B$ $\qquad$ $JB = x'$

$KA = B \cdot x'$ $\qquad$ $KB = A' \cdot x + A \cdot x' = A \oplus x$

Analysis: Example #2 (2/3)

$JA = B$ $\qquad$ $JB = x'$

$KA = B \cdot x'$ $\qquad$ $KB = A' \cdot x + A \cdot x' = A \oplus x$

- Fill the state table using the above functions, knowing the characteristics of the flip-flops used.

J	K	Q(t+1)	Comments
0	0	Q(t)	No change
0	1	0	Reset
1	0	1	Set
1	1	Q(t)'	Toggle

Present state		Input	Next state		Flip-flop inputs			
A	B	x	A^+	B^+	JA	KA	JB	KB
0	0	0			0	0	1	0
0	0	1			0	0	0	1
0	1	0			1	1	1	0
0	1	1			1	0	0	1
1	0	0			0	0	1	1
1	0	1			0	0	0	0
1	1	0			1	1	1	1
1	1	1			1	0	0	0

Analysis: Example #2 (3/3)

- Draw the state diagram from the state table.

Present state		Input	Next state		Flip-flop inputs			
A	*B*	*x*	A^+	B^+	*JA*	*KA*	*JB*	*KB*
0	0	0			0	0	1	0
0	0	1			0	0	0	1
0	1	0			1	1	1	0
0	1	1			1	0	0	1
1	0	0			0	0	1	1
1	0	1			0	0	0	0
1	1	0			1	1	1	1
1	1	1			1	0	0	0

Analysis: Example #3 (1/3)

- Derive the state table and state diagram of this circuit.

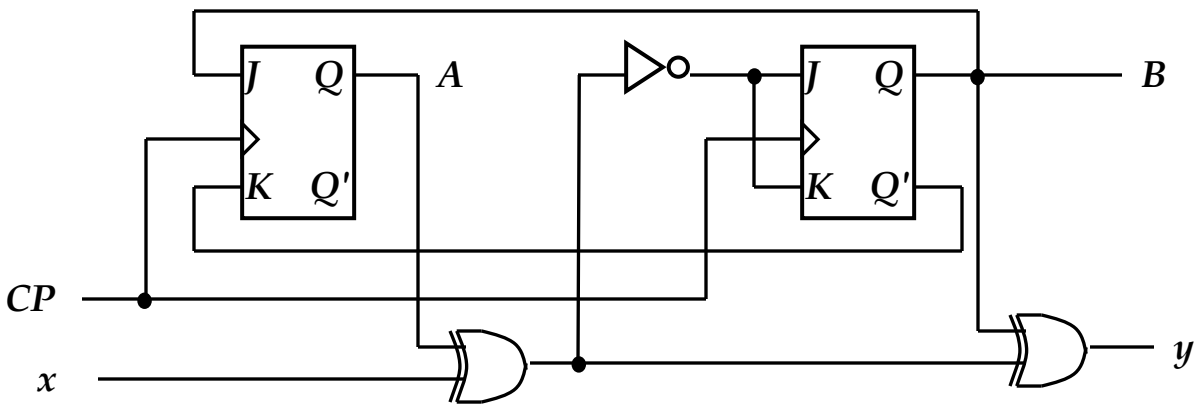

Figure 3

- Flip-flop input functions:

$JA = B$ $\qquad$ $JB = KB = (A \oplus x)' = A{\cdot}x + A'{\cdot}x'$

$KA = B'$

Analysis: Example #3 (2/3)

- Flip-flop input functions:

  $JA = B$ $\qquad$ $JB = KB = (A \oplus x)' = A \cdot x + A' \cdot x'$

  $KA = B'$

- State table:

Present state		Input	Next state		Output	Flip-flop inputs			
A	B	x	A^+	B^+	y	JA	KA	JB	KB
0	0	0			0	0	1	1	1
0	0	1			1	0	1	0	0
0	1	0			1	1	0	1	1
0	1	1			0	1	0	0	0
1	0	0			1	0	1	0	0
1	0	1			0	0	1	1	1
1	1	0			0	1	0	0	0
1	1	1	[illegible]	[illegible]	1	1	0	1	1

Analysis: Example #3 (3/3)

- State diagram:

Present state		Input	Next state		Output	Flip-flop inputs			
A	*B*	*x*	A^+	B^+	*y*	*JA*	*KA*	*JB*	*KB*
0	0	0			0	0	1	1	1
0	0	1			1	0	1	0	0
0	1	0			1	1	0	1	1
0	1	1			0	1	0	0	0
1	0	0			1	0	1	0	0
1	0	1			0	0	1	1	1
1	1	0			0	1	0	0	0
1	1	1			1	1	0	1	1

Flip-Flop Excitation Tables (1/2)

- *Analysis*: Starting from a circuit diagram, derive the state table or state diagram.
- *Design*: Starting from a set of specifications (in the form of state equations, state table, or state diagram), derive the logic circuit.
- *Characteristic tables* are used in analysis.
- *Excitation tables* are used in design.

Flip-Flop Excitation Tables (2/2)

- *Excitation tables*: given the required transition from present state to next state, determine the flip-flop input(s).

Q	Q^+	J	K
0	0	0	X
0	1	1	X
1	0	X	1
1	1	X	0

JK Flip-flop

Q	Q^+	S	R
0	0	0	X
0	1	1	0
1	0	0	1
1	1	X	0

SR Flip-flop

Q	Q^+	D
0	0	0
0	1	1
1	0	0
1	1	1

D Flip-flop

Q	Q^+	T
0	0	0
0	1	1
1	0	1
1	1	0

T Flip-flop

Sequential Circuits: Design

- Design procedure:
  - Start with circuit specifications – description of circuit behaviour, usually a state diagram or state table.
  - Derive the state table.
  - Perform state reduction if necessary.
  - Perform state assignment.
  - Determine number of flip-flops and label them.
  - Choose the type of flip-flop to be used.
  - Derive circuit excitation and output tables from the state table.
  - Derive circuit output functions and flip-flop input functions.
  - Draw the logic diagram.

Design: Example #1 (1/5)

- Given the following state diagram, design the sequential circuit using *JK* flip-flops.

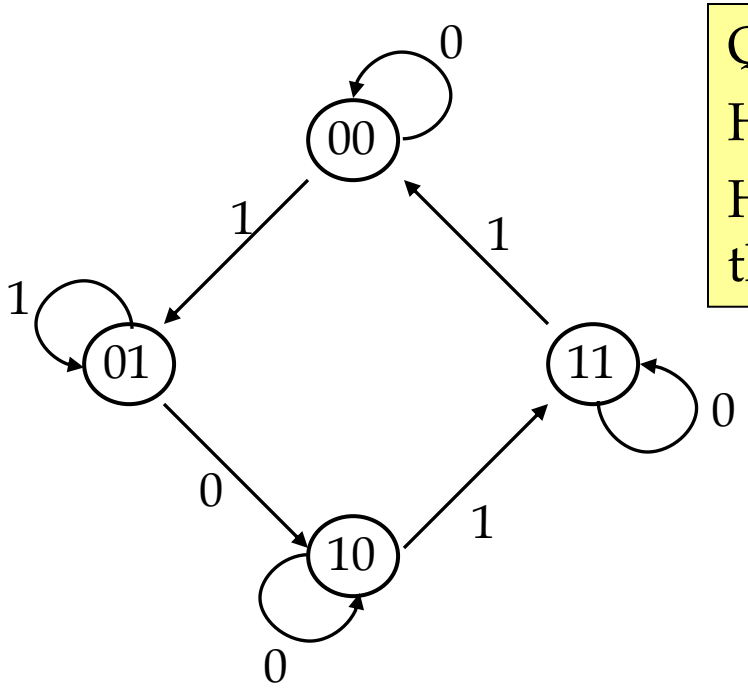

Questions:

How many flip-flops are needed?

How many input variable are there?

Design: Example #1 (2/5)

- Circuit state/excitation table, using *JK* flip-flops.

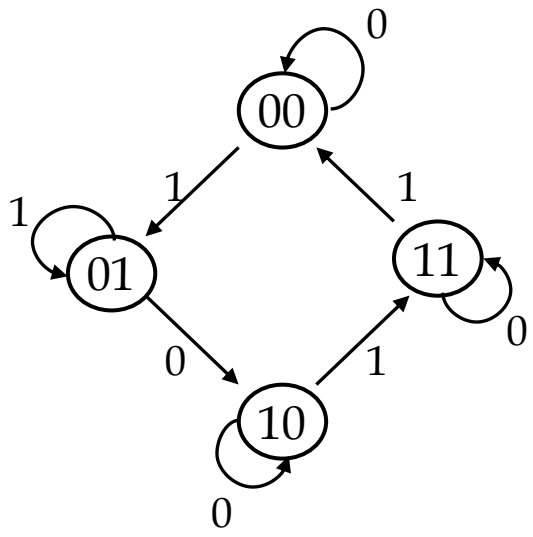

Present State	Next State x=0	Next State x=1
AB	A^+B^+	A^+B^+
00	00	01
01	10	01
10	10	11
11	11	00

Q	Q^+	J	K
0	0	0	X
0	1	1	X
1	0	X	1
1	1	X	0

JK Flip-flop's excitation table.

Present state		Input	Next state		Flip-flop inputs			
A	B	x	A^+	B^+	JA	KA	JB	KB
0	0	0	0	0				
0	0	1	0	1				
0	1	0	1	0				
0	1	1	0	1				
1	0	0	1	0				
1	0	1	1	1				
1	1	0	1	1				
1	1	1	0	0				

Design: Example #1 (3/5)

- Block diagram.

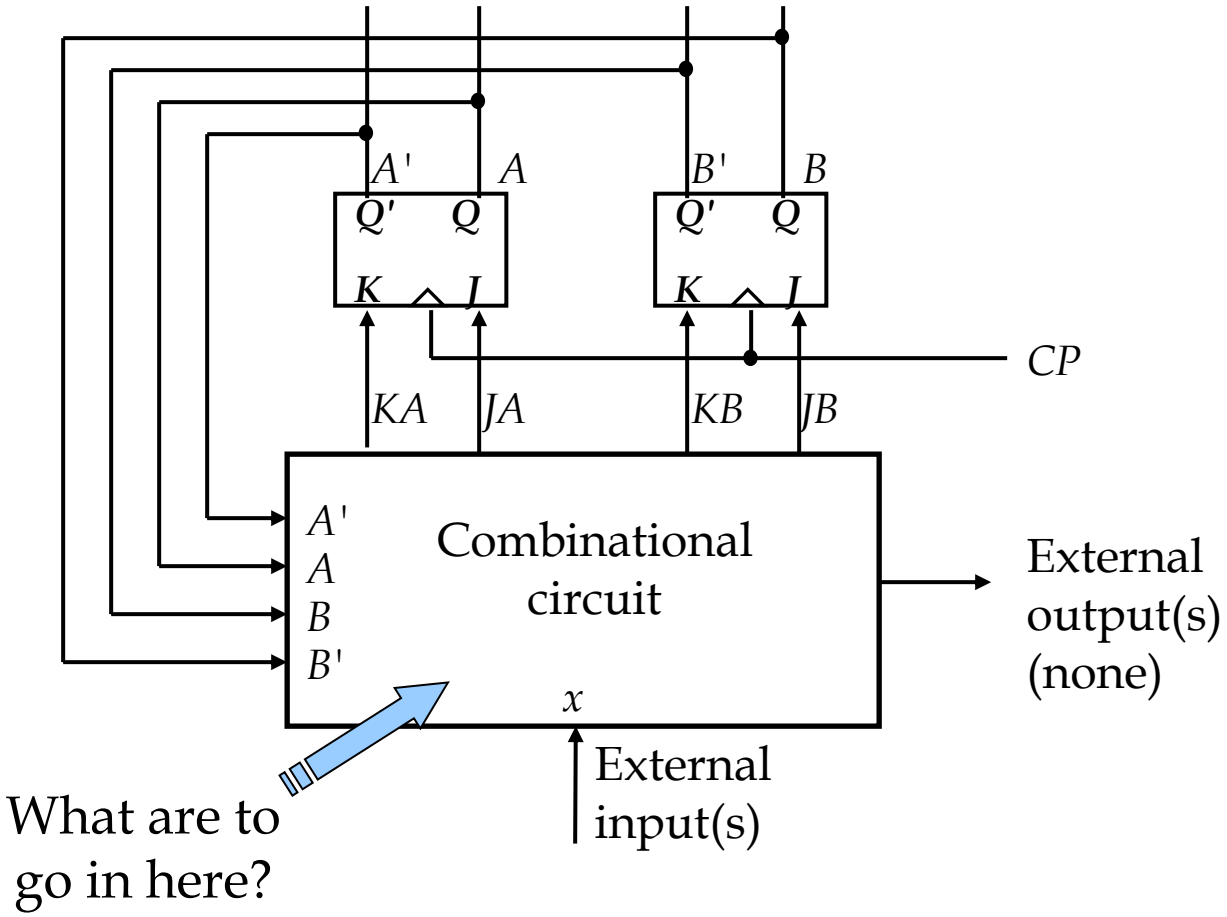

Design: Example #1 (4/5)

- From state table, get flip-flop input functions.

Present state		Input	Next state		Flip-flop inputs			
A	B	x	A^+	B^+	JA	KA	JB	KB
0	0	0	0	0	0	X	0	X
0	0	1	0	1	0	X	1	X
0	1	0	1	0	1	X	X	1
0	1	1	0	1	0	X	X	0
1	0	0	1	0	X	0	0	X
1	0	1	1	1	X	0	1	X
1	1	0	1	1	X	0	X	0
1	1	1	0	0	X	1	X	1

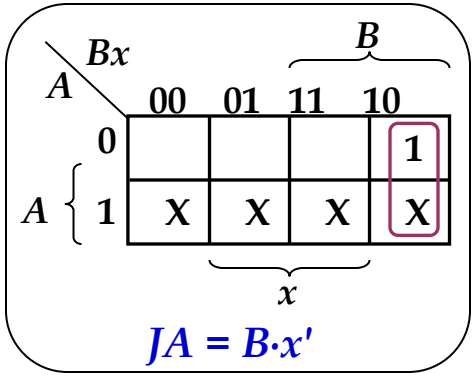

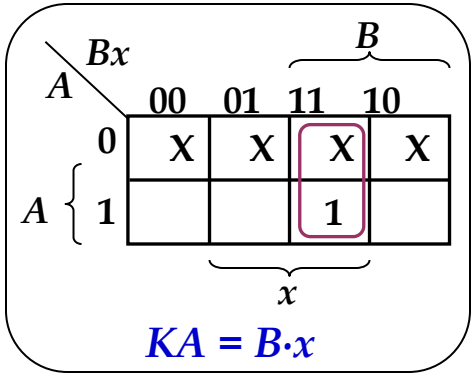

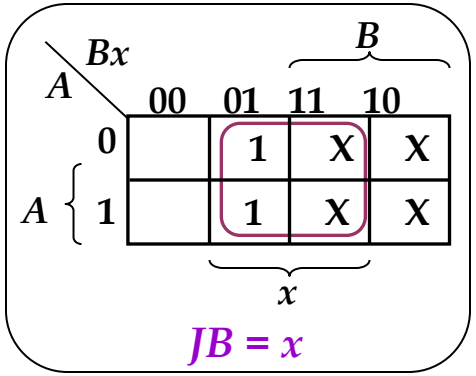

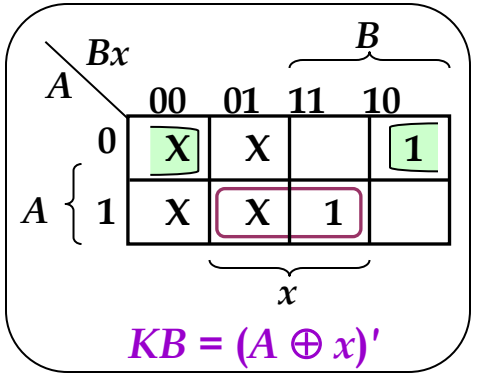

Design: Example #1 (5/5)

- Flip-flop input functions:

  $JA = B \cdot x'$ $\quad$ $JB = x$

  $KA = B \cdot x$ $\quad$ $KB = (A \oplus x)'$

- Logic diagram:

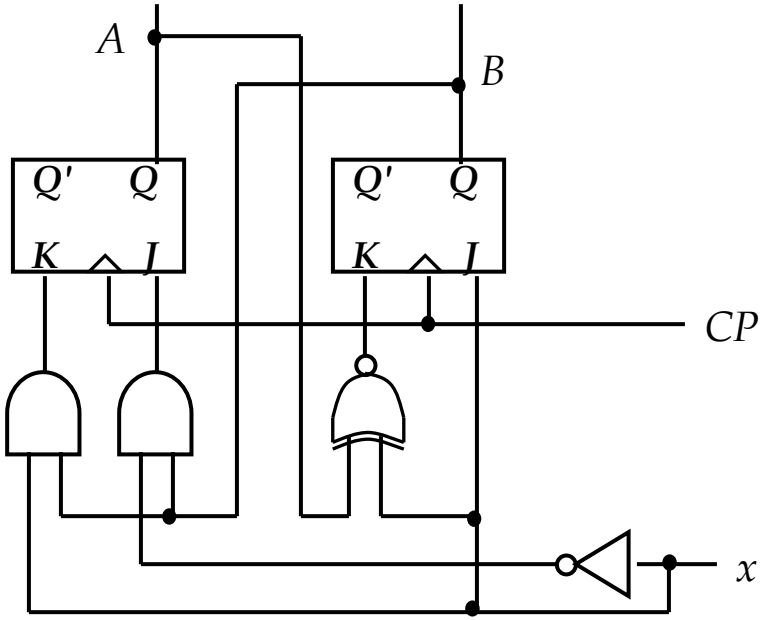

Design: Example #2 (1/3)

- Using *D* flip-flops, design the circuit based on the state table below. (Exercise: Design it using *JK* flip-flops.)

Present state		Input	Next state		Output
A	B	x	A^+	B^+	y
0	0	0	0	0	0
0	0	1	0	1	1
0	1	0	1	0	0
0	1	1	0	1	0
1	0	0	1	0	0
1	0	1	1	1	1
1	1	0	1	1	0
1	1	1	0	0	0

Design: Example #2 (2/3)

- Determine expressions for flip-flop inputs and the circuit output y.

Present state		Input	Next state		Output
A	B	x	A^+	B^+	y
0	0	0	0	0	0
0	0	1	0	1	1
0	1	0	1	0	0
0	1	1	0	1	0
1	0	0	1	0	0
1	0	1	1	1	1
1	1	0	1	1	0
1	1	1	0	0	0

$DA(A,B,x) = \sum m(2,4,5,6)$

$DB(A,B,x) = \sum m(1,3,5,6)$

$y(A,B,x) = \sum m(1,5)$

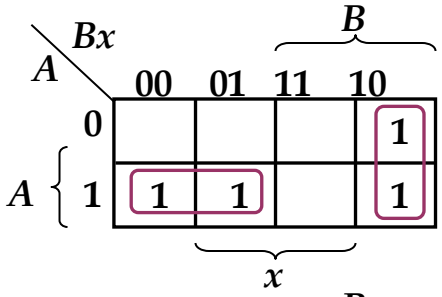

$DA = A \cdot B' + B \cdot x'$

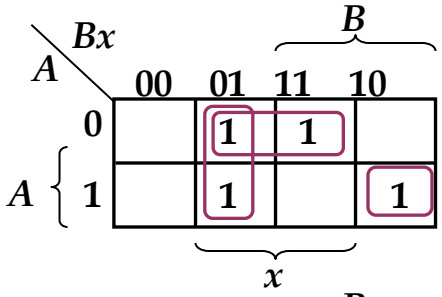

$DB = A' \cdot x + B' \cdot x + A \cdot B \cdot x'$

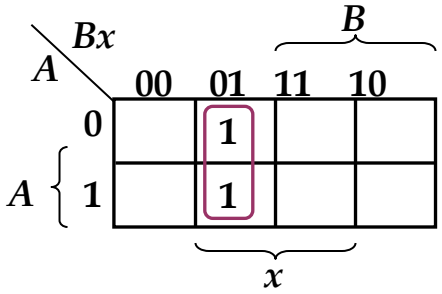

$y = B' \cdot x$

Design: Example #2 (3/3)

- From derived expressions, draw logic diagram:

$DA = A \cdot B' + B \cdot x'$

$DB = A' \cdot x + B' \cdot x + A.B \cdot x'$

$y = B' \cdot x$

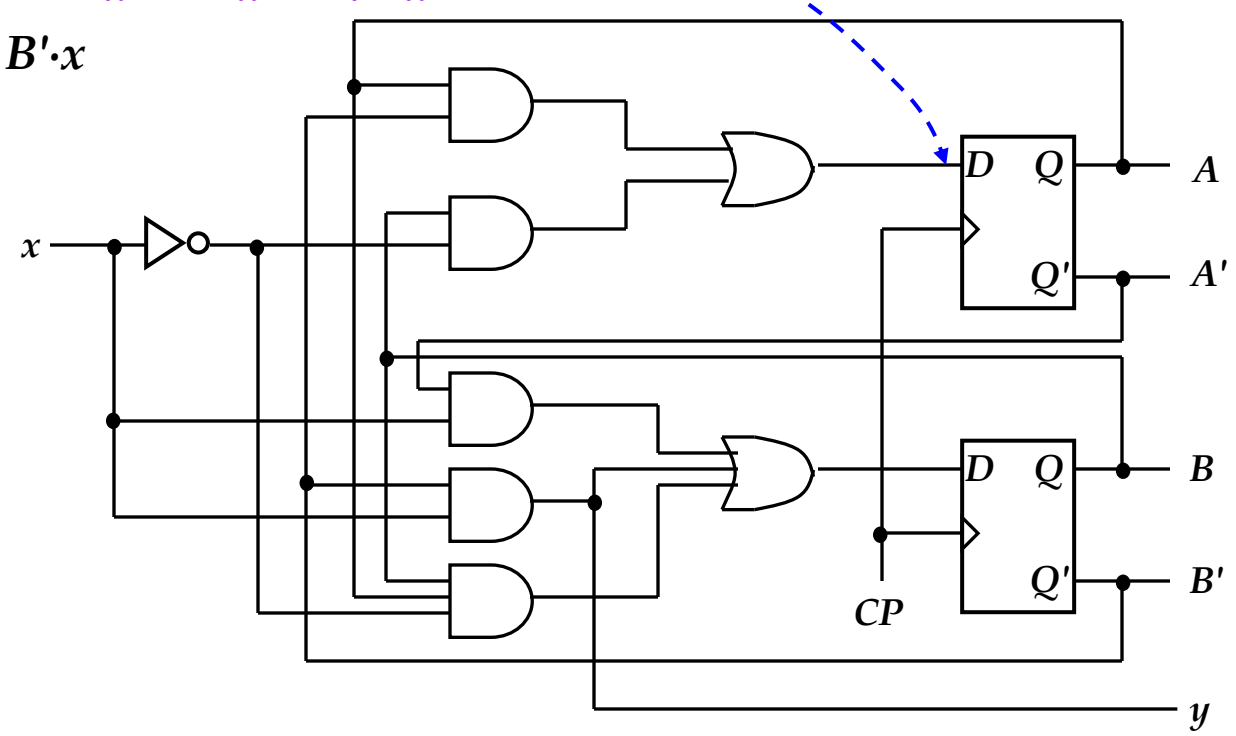

Design: Example #3 (1/4)

- Design involving unused states.

Present state			Input	Next state			Flip-flop inputs						Output
A	B	C	x	A^+	B^+	C^+	SA	RA	SB	RB	SC	RC	y
0	0	1	0	0	0	1	0	X	0	X	X	0	0
0	0	1	1	0	1	0	0	X	1	0	0	1	0
0	1	0	0	0	1	1	0	X	X	0	1	0	0
0	1	0	1	1	0	0	1	0	0	1	0	X	0
0	1	1	0	0	0	1	0	X	0	1	X	0	0
0	1	1	1	1	0	0	1	0	0	1	0	1	0
1	0	0	0	1	0	1	X	0	0	X	1	0	0
1	0	0	1	1	0	0	X	0	0	X	0	X	1
1	0	1	0	0	0	1	0	1	0	X	X	0	0
1	0	1	1	1	0	0	X	0	0	X	0	1	1

Given these

Derive these

Are there other unused states?

Unused state 000:

0	0	0	0	X	X	X	X	X	X	X	X	X	X
0	0	0	1	X	X	X	X	X	X	X	X	X	X

Design: Example #3 (2/4)

- From state table, obtain expressions for flip-flop inputs.

$SA = ?$

$AB \backslash Cx$	00	01	11	10
00	X	X		
01		1	1	
11	X	X	X	X
10	X	X	X	

$RA = ?$

$AB \backslash Cx$	00	01	11	10
00	X	X	X	X
01	X			X
11	X	X	X	X
10				1

$SB = ?$

$AB \backslash Cx$	00	01	11	10
00	X	X	1	
01	X			
11	X	X	X	X
10				

$RB = ?$

$AB \backslash Cx$	00	01	11	10
00	X	X		X
01		1	1	1
11	X	X	X	X
10	X	X	X	X

Design: Example #3 (3/4)

- From state table, obtain expressions for flip-flop inputs (cont'd).

$SC = ?$

$AB \backslash Cx$	00	01	11	10
00	X	X		X
01	1			X
11	X	X	X	X
10	1			X

A, B, C, x

$RC = ?$

$AB \backslash Cx$	00	01	11	10
00	X	X	1	
01		X	1	
11	X	X	X	X
10		X	1	

A, B, C, x

$y = ?$

$AB \backslash Cx$	00	01	11	10
00	X	X		
01				
11	X	X	X	X
10		1	1	

A, B, C, x

Design: Example #3 (4/4)

- From derived expressions, draw the logic diagram:
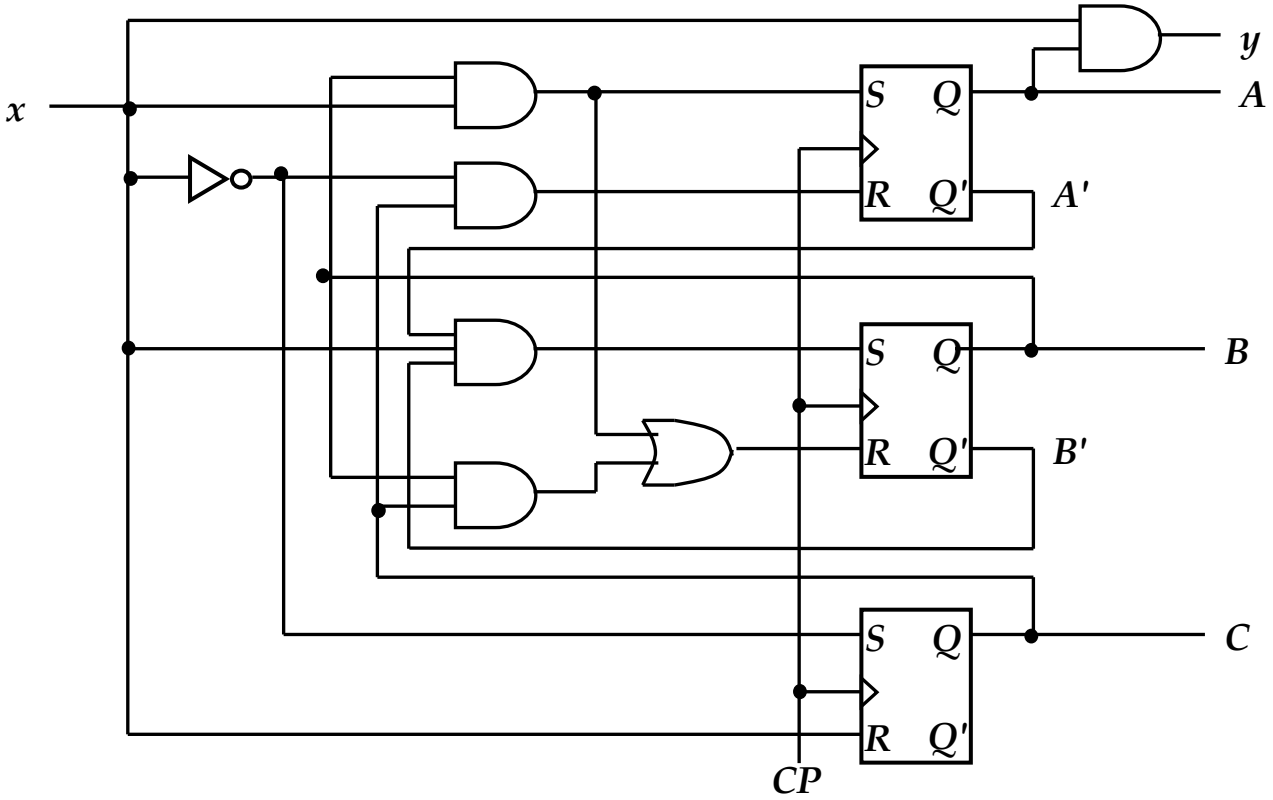
$SA = B \cdot x$	$SB = A' \cdot B' \cdot x$	$SC = x'$	$y = A \cdot x$
$RA = C \cdot x'$	$RB = B \cdot C + B \cdot x$	$RC = x$